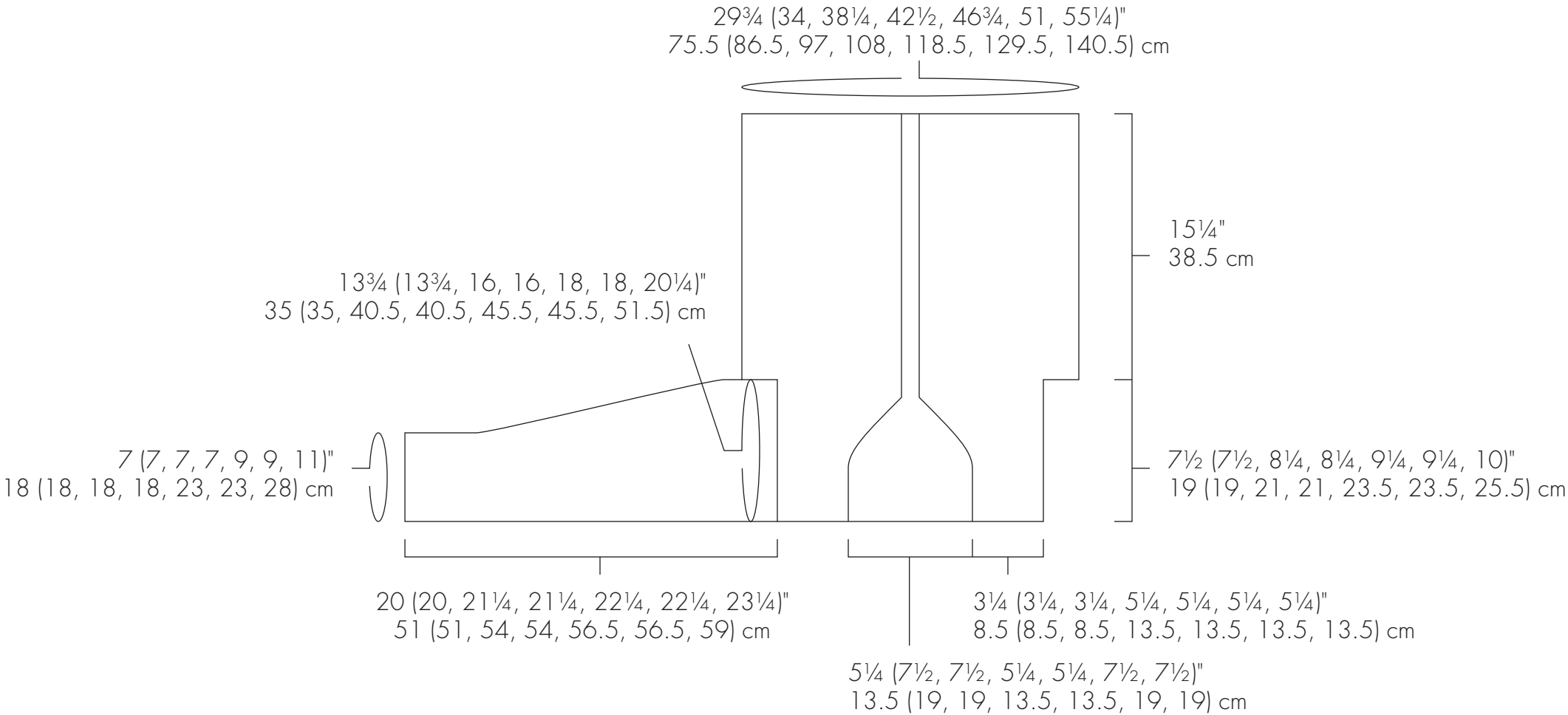
29¾ (34, 38¼, 42½, 46¾, 51, 55¼)"
75.5 (86.5, 97, 108, 118.5, 129.5, 140.5) cm
15¼"
38.5 cm
13¾ (13¾, 16, 16, 18, 18, 20¼)"
35 (35, 40.5, 40.5, 45.5, 45.5, 51.5) cm
7 (7, 7, 7, 9, 9, 11)"
18 (18, 18, 18, 23, 23, 28) cm
7½ (7½, 8¼, 8¼, 9¼, 9¼, 10)"
19 (19, 21, 21, 23.5, 23.5, 25.5) cm
20 (20, 21¼, 21¼, 22¼, 22¼, 23¼)"
51 (51, 54, 54, 56.5, 56.5, 59) cm
3¼ (3¼, 3¼, 5¼, 5¼, 5¼, 5¼)"
8.5 (8.5, 8.5, 13.5, 13.5, 13.5, 13.5) cm
5¼ (7½, 7½, 5¼, 5¼, 7½, 7½)"
13.5 (19, 19, 13.5, 13.5, 19, 19) cm