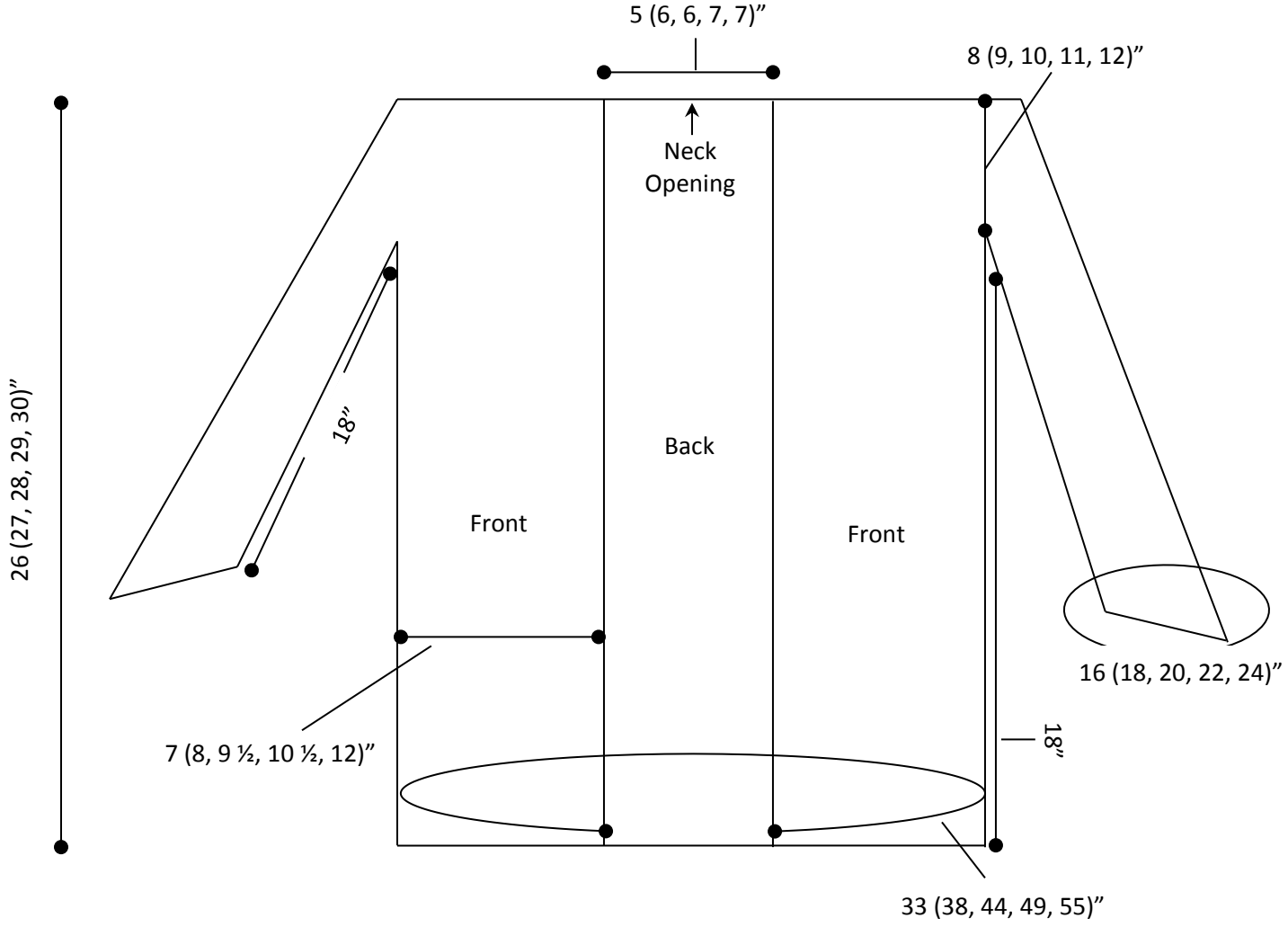
5 (6, 6, 7, 7)”
8 (9, 10, 11, 12)”
Neck
Opening
26 (27, 28, 29, 30)”
18”
Back
Front
Front
16 (18, 20, 22, 24)”
7 (8, 9 ½, 10 ½, 12)”
18”
33 (38, 44, 49, 55)”